SpectrumX RadioHound RF Sensor

v3.3

Features

- Tuning range 100 MHz to 6 GHz
- 20 MHz instantaneous bandwidth
- Single 5V supply, 600 mA (sensor only)
- Power: 3 watts
- Minimum detectable signal: -120 dBm
- Input 1dB compression: -15 dBm
- Form factor: 95mm x 56.5mm x 22mm (Including connectors and headers)
- RF inputs: (2) SMA connectors (100-1000MHz, 1-6GHz)

Functional Block Diagram

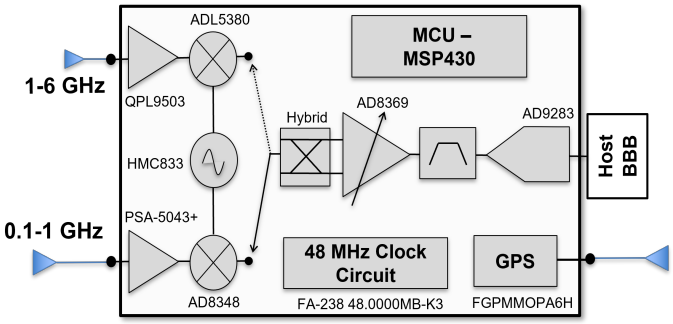

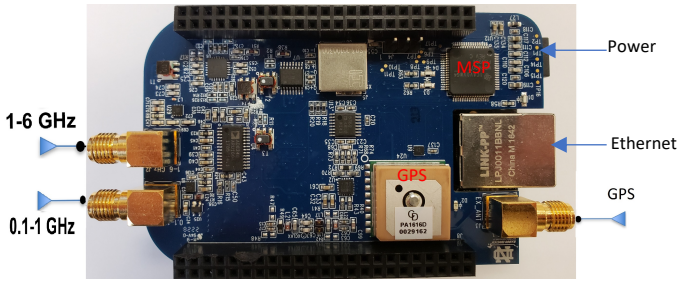

General Description

The RadioHound platform is a low-cost, distributed spectrum sensing system comprised of heterogeneous sensor nodes, measurement controller and visualization user interface, extensible algorithms, and an archival database. RadioHound was designed for field experiments where rapid deployment and high sensor density are critical. As such the design minimizes cost, power, and size.

Sensors (Hardware)

The system supports an unlimited number of sensors of almost any type ranging in complexity from instrument-grade real-time spectrum analyzers to commercial software-defined radios and even other sensor types including direction-of-arrival (e.g., DF, TDOA) sensors. However, the **standard RadioHound sensor node** (described herein) is a low-cost ($75) frequency tuned FFT-analyzer. A custom RF front-end, affixed to a BeagleBone Black Linux single-board computer, convert the RF spectrum from 100 MHz to 6 GHz to a fixed IF (60 MHz) where it is sampled by a 48 MHz ADC. The ADC samples the IF by its third Nyquist Zone and records a complex baseband (IQ) time-domain signal from each tuned band at 48MSPS (24 MHz RF bandwidth). The RF front-end has two antenna inputs spanning the 100-1000 MHz and 1-6 GHz bands. The RF front-end can measure from -100 to -10 dBm.

Sensors (Software)

The BeagleBone Black runs in-house developed software called Icarus which interfaces with the RadioHound platform, responds to commands, takes measurements, processes raw data and generates reports with either time or frequency domain data.

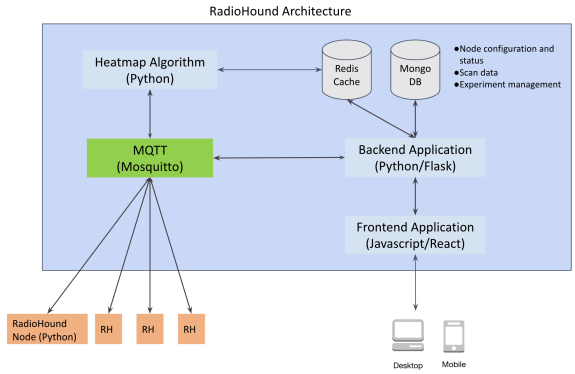

Network

RadioHound sensors connect to an internal MQTT network to receive commands and return data. Sensors can operate with or without an active network connection, caching data locally until a network connection is available. Nodes can use wired ethernet, Wifi or a cellular hotspot to create a secure tunnel back to the server.

Access & Control

Accessing nodes is done through a web dashboard. Real-time scans include a Periodogram, a Waterfall plot and a multi-node Heatmap. Experiments are also available for continual background scans for later processing.

Algorithms & Visualization

Waterfall plot: A waterfall plot shows the current periodogram with variable frequency span from 20 MHz (<0.2 second update rate) to the entire 6 GHz band (~10 minutes) with 125 Hz RBW. Below the current periodogram is a waterfall plot with autoscaling (or manually adjusted) colormap and variable history duration.

Heatmap: A heatmap display shows an interpolated surface of the power over a spatial region based upon a collection of sensor readings within a specified RF bandwidth. The default is a 20 MHz band around a center frequency. The color scale represents the integrated power in the selected band. The heatmap has a typical update rate of ~1 second for 15 nodes with 20 MHz BW. A mouse hover tip shows the current latitude and longitude and can be useful for emitter geolocation. Depending upon the heatmap algorithm specified an emitter location can be estimated from the power profile. Map data is provided by Google maps for operation with internet access.

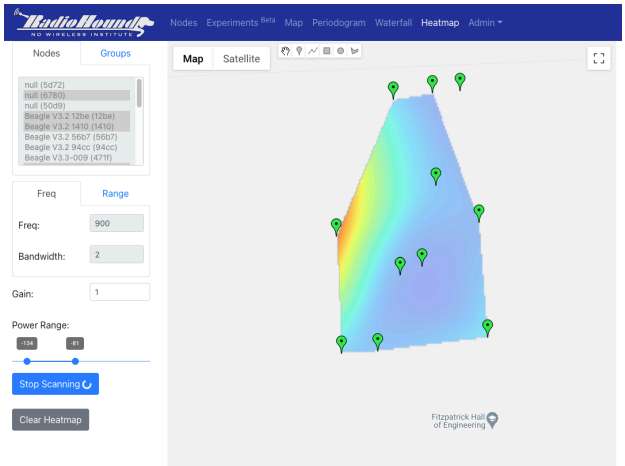

MSP: Calibration and ID

Every RadioHound sensor produces calibrated IQ samples for post processing. A calibration table is stored on the on-board microcontroller MSP430FR59944, and on the host. The power computed from the calibrated IQ signal is accurate to within 3 dB across the whole frequency range.

GPS

The board includes a GPS component with real-time clock, which will provide the location of the sensors and also keep tracking the time even when there is no network available.

Electrical Specifications

Parameter	*Min*	*Typ*	*Max*	*Units*	*Comments*
Supply Voltage		5		V	
RF Input Power	-120		-18	dBm	Variable gain must be adjusted to access entire range
RF Frequency	100		6000	MHz	
IF Frequency		60		MHz	
Tunable Gain	-5		40	dB	On-Board VGA tunable gain
MDS		-120		dBm	
P1dB		-15		dBm	
Board Gain	35		80	dB	
Noise Figure	2		25	dB	